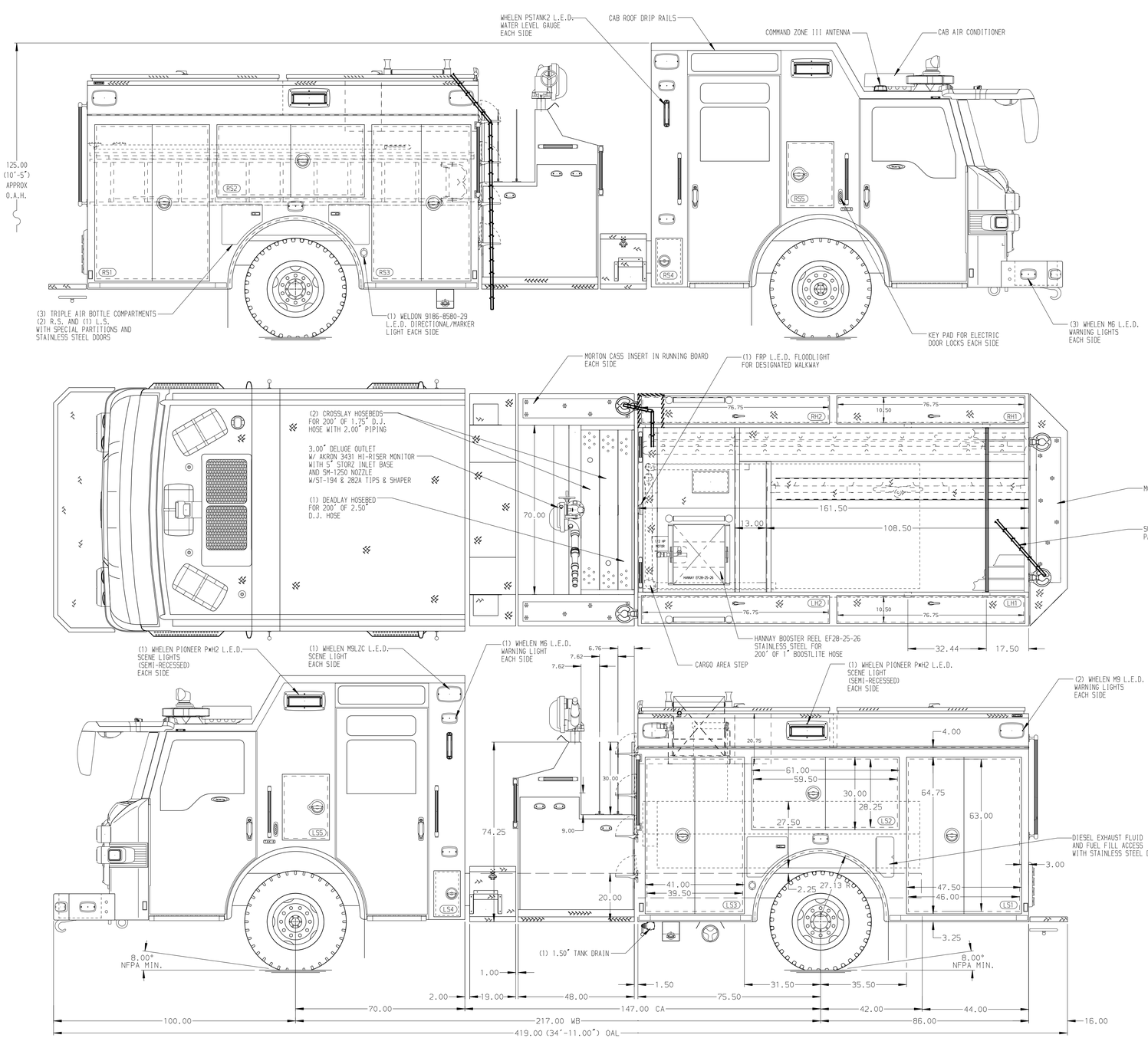

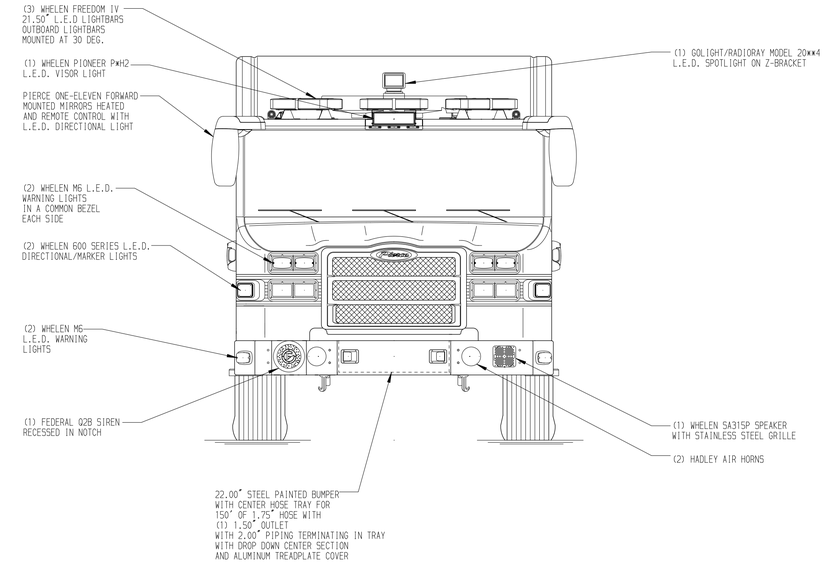

HOSEBED CAPACITIES

1. 200' OF 2.50" D.J. POLY HOSE
2. 800' OF 5.00" D.J. POLY HOSE
3. 300' OF 1.75" D.J. POLY HOSE
4. 400' OF 2.50" D.J. POLY HOSE

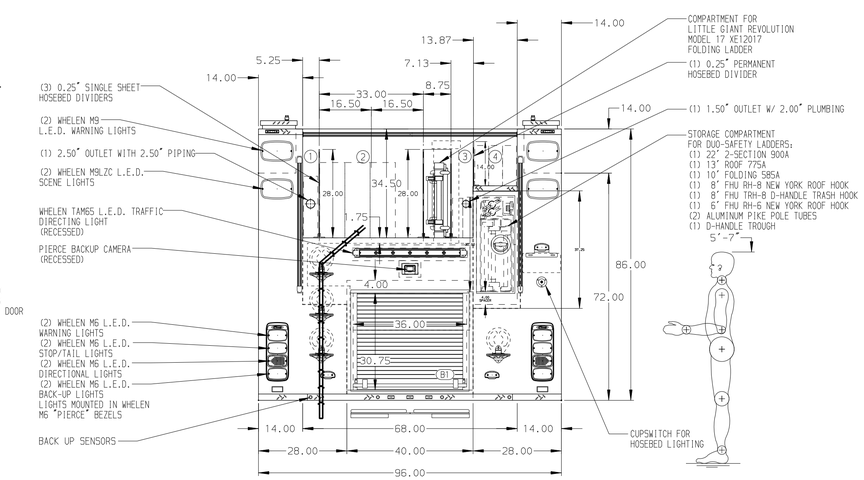

ALUMINUM BODY

FRONTAL IMPACT PROTECTION

NOTE

DIMENSIONS SHOWN ARE APPROXIMATE AND ARE SUBJECT TO MINOR DEVIATIONS AS MAY OCCUR OR BE NECESSARY IN CONSTRUCTION.
MINOR DETAILS NOT SHOWN.

1. WHEEL CHOCKS AND BRACKETS (CTF)
2. AIR INLET WITH DISCONNECT COUPLING IN A RECESSED ALUMINUM TREADPLATE BOX W/COVER ON D.S. STEP WELL
3. AIR OUTLET WITH SHUT OFF VALVE ON D.S. PUMP PANEL
4. BATTERY CHARGER LOCATED IN LS3
5. BATTERY CHARGER INDICATOR LOCATED NEAR DRIVER'S SEAT RISER
6. 120V SHORELINE RECEPTACLE WITH KUSSMAUL SUPER AUTO-EJECT ON D.S. PUMP PANEL
7. BRUSHED STAINLESS STEEL SCUFFPLATE INSIDE EACH BODY COMPARTMENT DOORS
8. ONE FULL WIDTH/DEPTH ADJUSTABLE SHELF IN LS3; TWO IN LS1 AND RS3
9. ONE FLOOR MOUNTED SLIDE-OUT TRAY IN COMPARTMENT B1
10. ALL BODY COMPARTMENTS WITH LOUVERS SHALL HAVE A REMOVABLE FILTER
11. PAC TRAC ON THE UPPER REAR WALL OF LS3
12. PARTITION BETWEEN COMPARTMENTS LS1/B1 AND RS1/B1
13. ONE SPECIAL HEIGHT VERTICAL PARTITION IN LS1
14. L-SHAPED PARTITION IN RS1
15. 4" HIGH DRAWER W/ SLIDE OUT TRACKS IN LS3
16. STORAGE BIN FOR 2 AIR BOTTLES IN LS1
17. W-SHAPED AIR BOTTLE COMPARTMENT INSERT LS FWD, RS FWD, AND RS REAR
18. ACCESS DOORS ON THE PUMP PANELS
19. ALUMINUN 4-WAY ON CAB ROOF

REV	DATE	BY	CH
5	05MAY21	SAM	CHR
4	04MAY21	SAM	CHR
3	02APR21	SAM	CHR
2	19JAN21	SAM	PHA

CHASSIS DATA
MAKE: PIERCE
MODEL: VELOCITY FR

Pierce MANUFACTURING INC.

TITLE: 1500-D-500P, 500 GAL WATER, 161" BODY (2)CROSSLAYS, (1) DEADLAY, DELUGE, BOOSTER REEL
FOR: MURRAY CITY FIRE DEPARTMENT MURRAY, UTAH
DWG NO.: 35808AD

JOB NO.	35808
SCALE	1:24
DATE	
DRAWN BY	SAM 14JAN21
CHECKED BY	PHA 15JAN21
SHEET SIZE	D
SHEET NO.	1 OF 1

View File Created 05-MAY-2021 08:33:38