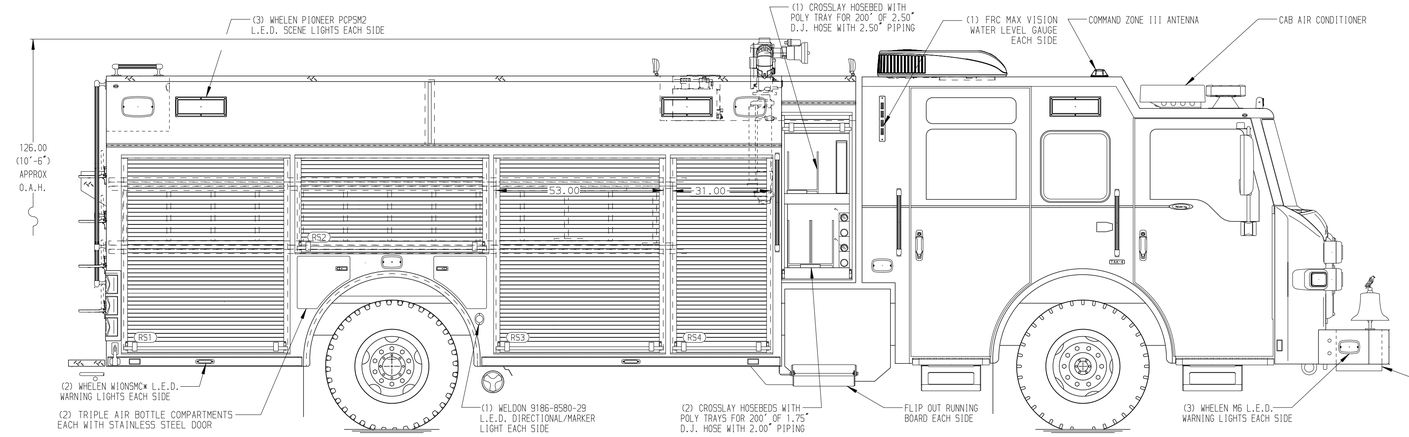

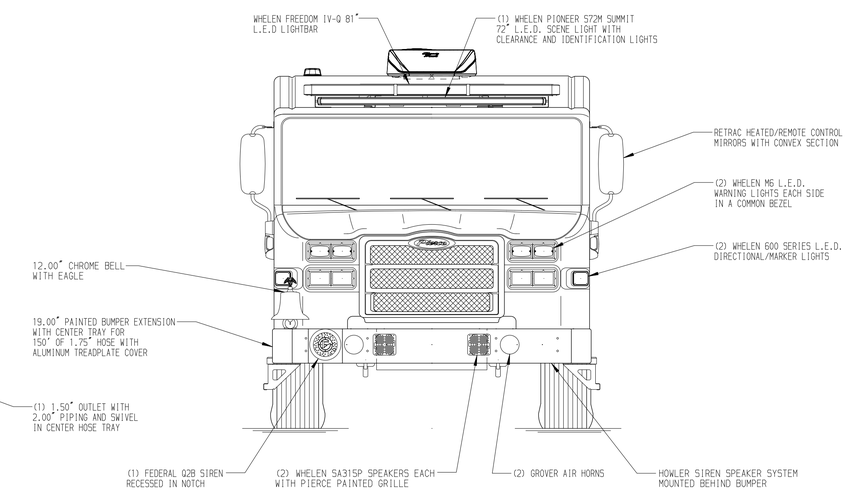

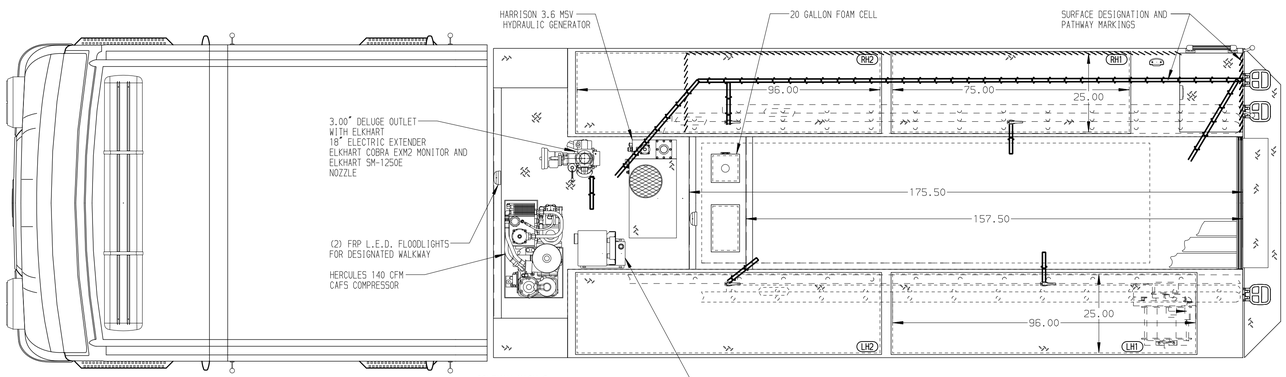

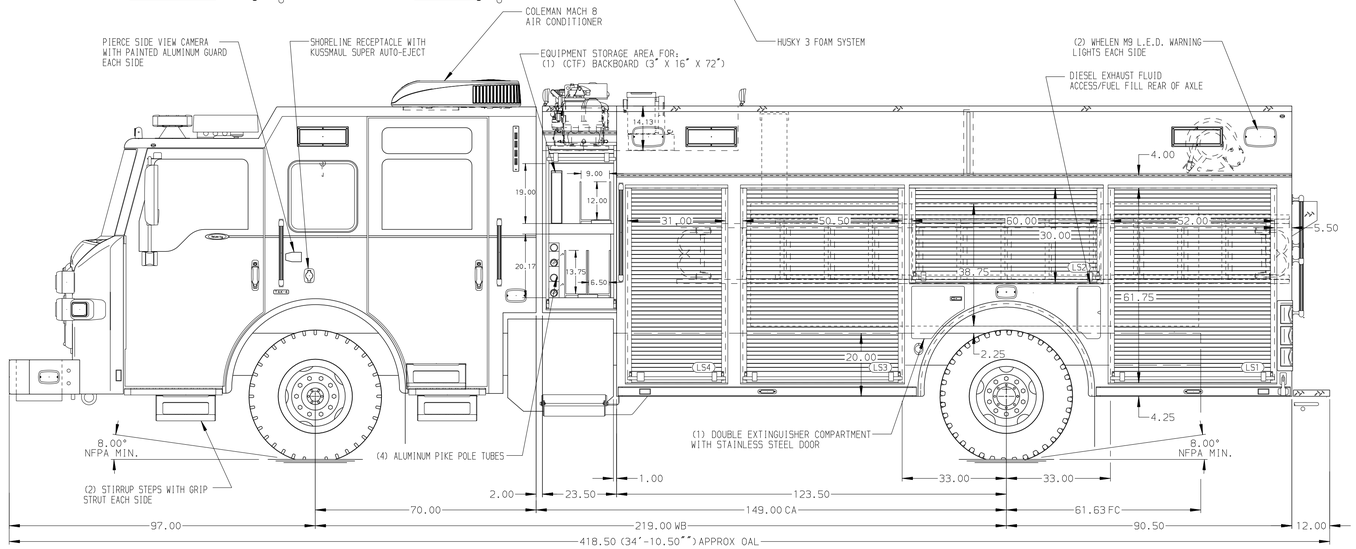

HOSEBED CAPACITIES

1. 500' OF 2.50" D.J.POLY HOSE
2. 1000' OF 5.00" D.J.POLY HOSE

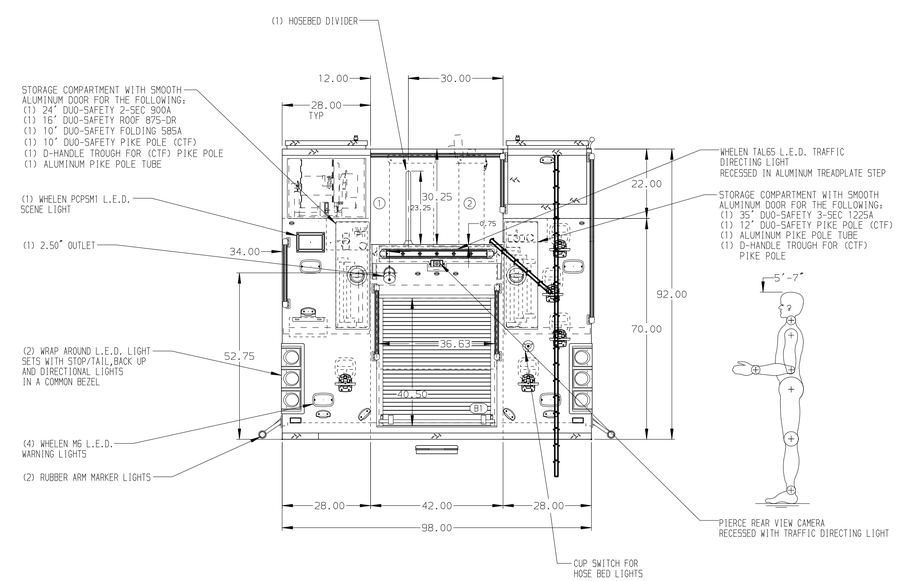

ALUMINUM BODY

SIDE ROLL AND FRONTAL IMPACT PROTECTION

NOTE

DIMENSIONS SHOWN ARE APPROXIMATE AND ARE SUBJECT TO MINOR DEVIATIONS AS MAY OCCUR OR BE NECESSARY IN CONSTRUCTION.
MINOR DETAILS NOT SHOWN.

1. BATTERY CHARGER LOCATED IN COMPARTMENT LS3
2. BATTERY CHARGE INDICATOR LOCATED NEAR DRIVER'S SEAT RISER WITH BRACKET
3. DUAL L.E.D. LIGHT STRIPS LOCATED IN HOSE BED
4. ONE FULL WIDTH/DEPTH ADJUSTABLE SHELF IN COMPARTMENTS LS1, LS3, B1, RS1, AND RS3
5. ONE FLOOR MOUNTED SLIDE-OUT TRAY IN COMPARTMENTS LS1, B1, RS1, AND RS3
6. ONE SWING-OUT ALUMINUM TOOL BOARD IN COMPARTMENT RS2
7. ONE VERTICAL DIVIDER IN COMPARTMENT RS2
8. PLASTIC SHEETING HOLDER WITH S/S ROD AND PIN LOCK IN COMPARTMENT LS2
9. THREE STORAGE BINS FOR EXTINGUISHERS AND AIR BOTTLES IN COMPARTMENT B1
10. CIRCUIT BREAKER PANEL IN COMPARTMENT LS1
11. AIR INLET WITH DISCONNECT COUPLING IN A RECESSED ALUMINUM TREADPLATE BOX IN DRIVER'S STEP WELL
12. ONE HANNAY ECR1618-17-18 SERIES ELECTRIC REWIND CORD REEL WITH 200' OF 10/3 CORD LOCATED IN HATCH COMPARTMENT LH1
13. SIX 120V DUPLEX RECEPTACLES - LOCATED IN COMARTMENTS LS1,LS2, LS3, RS1, RS2, AND RS3
14. 3/8" MOUNTING PLATE IN COMPARTMENT B1
15. ONE SLIDE-OUT ALUMINUM TOOL BOARD IN COMPARTMENT RS4
16. TRANS REAR PARTITION BETWEEN LS1/B1 AND RS1/B1
17. ONE ALUMINUM TOOL BOARD MOUNTED ON THE BACK WALL OF COMPARTMENTS LS3, RS1, AND RS3

REV	DATE	BY	CH
D	16MAR21	LST	CHR
C	09MAR21	LST	CHR
B	10FEB21	LST	CHR
A	16OCT20	LST	WKL

CHASSIS DATA — MAKE: PIERCE — MODEL: VELOCITY

Pierce MANUFACTURING INC.

TITLE: 1500-750 WATER/20 FOAM, 214" RESCUE BODY CROSSLAYS, DELUGE, HUSKY 3, GENERATOR

FOR: MURPHY FIRE RESCUE, MURPHY, TEXAS

DWG NO.: 35491AD

JOB NO.	35491
SCALE	1:24
DATE	
DRAWN BY	JRO 14OCT20
CHECKED BY	EGO 14OCT20
SHEET SIZE	D
SHEET NO.	1 OF 1

View File Created 16-MAR-2021 12:54:37